V ELECTRIC POWER

c UL us LISTED
E545878

INSTALLATION MANUAL

# VEC Load Control

## Single Dwelling & Multi-Family Applications

Smart Energy Management

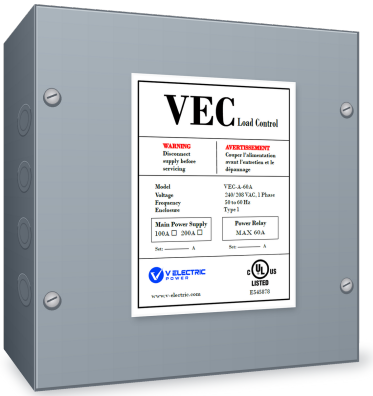


## IN THIS MANUAL

| | | |
|---|---|---|
| PART A | **Single Dwelling** | Installation & Setup |
| PART B | **Multi-Family** | Advanced Configuration |

## MODELS

- ☐ **VEC-A-60A** — Single Channel
- ☐ **VEC-A-60A-2C** — Dual Channel


**www.v-electric.com**
Made in Canada

**Rev 1.00.2610.0**
Revised November 11, 2026

# TABLE OF CONTENTS


**DISCLAIMER** ..... **3**
**SAFETY WARNING** ..... **3**
**DESCRIPTION** ..... **4**
**INSTALLATION LOCATION** ..... **4**
**TECHNICAL SPECIFICATIONS** ..... **5**
**PRODUCT OVERVIEW** ..... **6**
**CONNECTION DIAGRAM & TERMINATION** ..... **7**
**INSTALLATION STEPS** ..... **11**
Step 1: Mount the VEC ..... 11
Step 2: Install Branch-Circuit Breakers and Complete Power Wiring ..... 11
Step 3: Install the CTs in the Main Panel ..... 11
Step 4: Connect to the VEC (Mobile Hotspot) ..... 12
4.1 Android ..... 12
4.2 iPhone ..... 14
Step 5: Configure the VEC Settings ..... 16
Step 6: Change the Device Name, Network Name (SSID) and Password ..... 19
Step 7: Reset the VEC (Optional) ..... 19
Step 8: Interlock Mode Configuration (Optional) ..... 20
Step 9: Future Configuration (Do Not Change During Initial Setup) ..... 20
**PART B: ADVANCED CONFIGURATION (MULTI-FAMILY)** ..... **22**
**WARRANTY** ..... **30**
**MODEL NUMBER STRUCTURE** ..... **31**
**PACKAGING CONTENTS** ..... **31**
**INSTALLATION RECORD** ..... **32**


> **Note:** Part A covers single-dwelling installation and setup. **Part B** covers advanced configuration for multi-family buildings and feeder protection with the VEC-xHUB.
>
> For **single-dwelling** installations, follow **Part A** only. Part B applies only to multi-family installations and may be disregarded for single-dwelling use.

# PART A | Single Dwelling
Installation & Setup

## DISCLAIMER

While every precaution has been taken to ensure the accuracy of the contents of this guide, V Electric Power Inc. assumes no responsibility for errors or omissions. Specifications and product functionality are subject to change without notice.

## SAFETY WARNING

> **WARNING: Read all instructions and warnings in this manual before starting installation. Improper installation can result in serious injury or death.**

- Disconnect power before performing any installation, maintenance, or servicing.
- Installation and wiring must comply with the applicable electrical code (CEC in Canada or NEC in the USA) and all local regulations. Work must be performed by a certified technician.
- Proper grounding of the VEC must comply with all applicable local and regional codes.
- Do not install the device in hazardous locations or near flammable materials, fuels, or chemical vapours.
- The installer is responsible for understanding the device's purpose and ensuring all safety measures are followed – for example, verifying that the power source is adequate for the connected load.
- Ensure all connections are properly torqued and all wires are securely tightened.
- Immediately stop using the unit if it is defective, broken, or damaged.
- If unsure, consult a qualified electrician or the manufacturer before proceeding with installation.

## INSTALLATION LOCATION

- The standard unit is for indoor installation. For outdoor installation, use the model with a Type 3R enclosure.
- Do not install the device in areas exposed to corrosive gases, acids or salt, or in hazardous locations. Refer to the applicable electrical code (CEC or NEC) for detailed requirements.
- The device is not dustproof. Do not install it in areas with high levels of dust.
- Do not install the device in greenhouses or wet areas, and never spray water or any other liquid onto the VEC.
- Do not install the VEC where the temperature may fall outside the operating range (–30 °C to +45 °C), for example in furnace rooms.

## DESCRIPTION

The **VEC-A-60A** and **VEC-A-60A-2C** allow one or two electrical loads – such as EV chargers, A/C units, hot tubs and dryers – to be connected to a panel that is already at full capacity, without a service upgrade. VEC Load Control (referred to as the **VEC**) helps avoid costly upgrades in existing homes and facilities.

Each unit can operate in load-shedding mode or interlock mode, set to suit the installation. For interlock mode, see Step 8: Interlock Mode Configuration.

> **Note:** All VEC units are expandable. Whether supplied as a single-channel or dual-channel model, each unit can be expanded to control up to three loads. Expansion modules are optional accessories and are purchased separately.

### Single-Channel and Dual-Channel Models



*Single Channel (VEC-A-60A)*

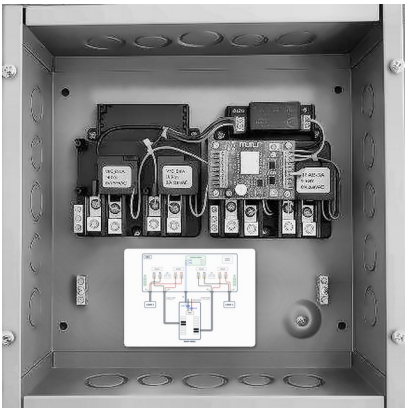

*Dual Channel (VEC-A-60A-2C)*

*Typical units shown. See Connection Diagram & Termination for wiring details.*

## TECHNICAL SPECIFICATIONS

| Parameter | Details |
|---|---|
| **Rated Voltage** | 120 / 208 / 240 VAC, single phase (L1, L2, N, G) |
| **Frequency** | 50/60 Hz |
| **Operating Temperature** | –30 °C to 45 °C (–22 °F to 113 °F) |
| **Power Relay Rating*** | 60 A per channel |
| **Main Supply Rating*** | ☐ 100 A ☐ 200 A |
| **Load Current Rating*** | Up to 60 A per channel |
| **Turn-Off Delay** | 1 to 15 s |
| **Turn-On Delay** | 1 to 60 min |
| **Maximum Conductor Size***** | 2 AWG (L1, L2, N) **(CU/AL) △** |
| **Maximum Terminal Lug Torque** | 50 in-lbf (5.6 N·m) |
| **Approximate Weight**** | Single Channel: 7.9 lb (3.6 kg)<br>Dual Channel: 13.2 lb (6 kg) |
| **Enclosure Dimensions (in)*** | ☐ 8×8×4 ☐ 10×10×4 ☐ 12×12×4 |
| **Enclosure Type** | ☐ Type 1 ☐ Type 3R |

* For additional sizes and ratings, contact V Electric Power. Custom configurations are available on request.

** Approximate and subject to change without notice.

*** Some versions use a 4 AWG neutral instead of 2 AWG.

> **△ CU/AL Conductors:** VEC lugs are suitable for both copper and aluminum conductors. Install conductors in accordance with the applicable electrical code and VEC installation requirements. For aluminum conductors, remove the oxide layer and apply a suitable oxide-inhibiting compound before termination. Tighten all conductor terminals to the specified torque.

# PRODUCT OVERVIEW

## Intended Use

VEC Load Control continuously monitors electrical current and automatically manages the connected loads to prevent overloading the main electrical panel. When controlling multiple loads, the VEC operates according to user-defined priorities, configured current limits and the available electrical capacity.

**How the system operates:**

- **Current monitoring and initial energization:** the VEC continuously monitors the current on L1 and L2 using split-core current transformers (CTs). At power-up it evaluates the measured currents and operating conditions. If all conditions are within the configured limits, the controlled loads are energized within a few seconds, without applying the normal reconnection delay.
- **CT disconnection protection:** if a CT disconnection is detected, the VEC automatically de-energizes the controlled relays, or prevents them from energizing, to ensure safe operation.
- **Overload protection:** when the measured current exceeds the configured threshold (typically 80% of the main breaker rating), the VEC disconnects the controlled load(s) after an adjustable turn-off delay, preventing excessive loading of the panel.
- **Automatic reconnection:** once the current returns to an acceptable level and all operating conditions are met, the VEC reconnects the controlled load(s) after the configured reconnection delay (default 6 minutes).
- **Multi-load management:** with multiple loads, the VEC controls their operation based on configured priorities and available capacity. Lower-priority loads may be temporarily disconnected to keep power to higher-priority loads.
- **Adjustable settings:** authorized users can configure current thresholds, load priorities, turn-off delays and reconnection delays to suit the installation and load requirements.
- **Supported loads:** EV chargers, air conditioners, hot tubs and other suitable electrical equipment, within the rated capacity of the system.
- **Safety compliance:** all connected loads must be installed in accordance with applicable electrical codes and standards. Where required, protective devices such as GFCI protection must be provided independently of the VEC.

## CONNECTION DIAGRAM & TERMINATION

Figure 1 shows the overall layout: the two CTs are installed in the main panel ahead of the main breaker, and the VEC is supplied from two-pole breakers in the main panel. Detailed wiring is shown in Figures 2 and 3.

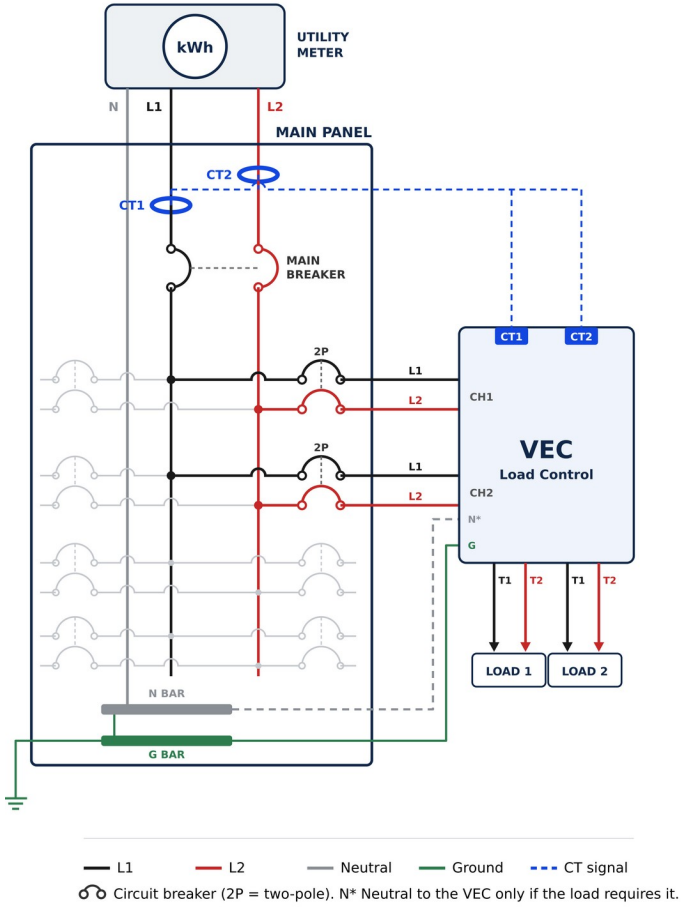


*Figure 1 – Connection overview*

**Note 1:** Size each two-pole breaker supplying the VEC according to the load rating.

**Note 2:** Load 2 is available only on dual-channel models.

## Single-Channel Wiring

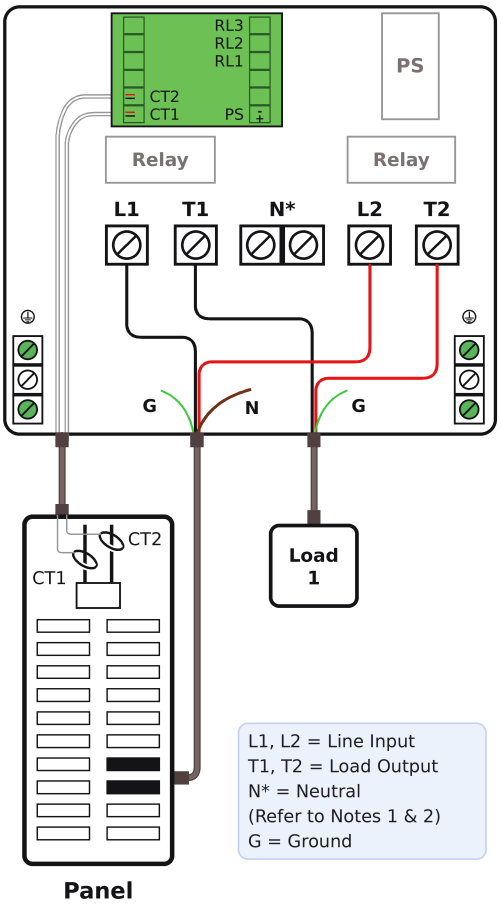


*Figure 2 – Single-channel wiring and terminations (L1, L2 = line input; T1, T2 = load output; N* = neutral; G = ground)*

**Note 1:** For both 120 V and 240 V loads, connect the supply to the L1 and L2 lugs and the load to the T1 and T2 lugs. Use the neutral lug only when a 240 V load requires a neutral; otherwise, connect nothing to it.

**Note 2:** For 120 V loads, use the L2 and T2 lugs as the neutral terminals (N) of the device.

## Dual-Channel Wiring

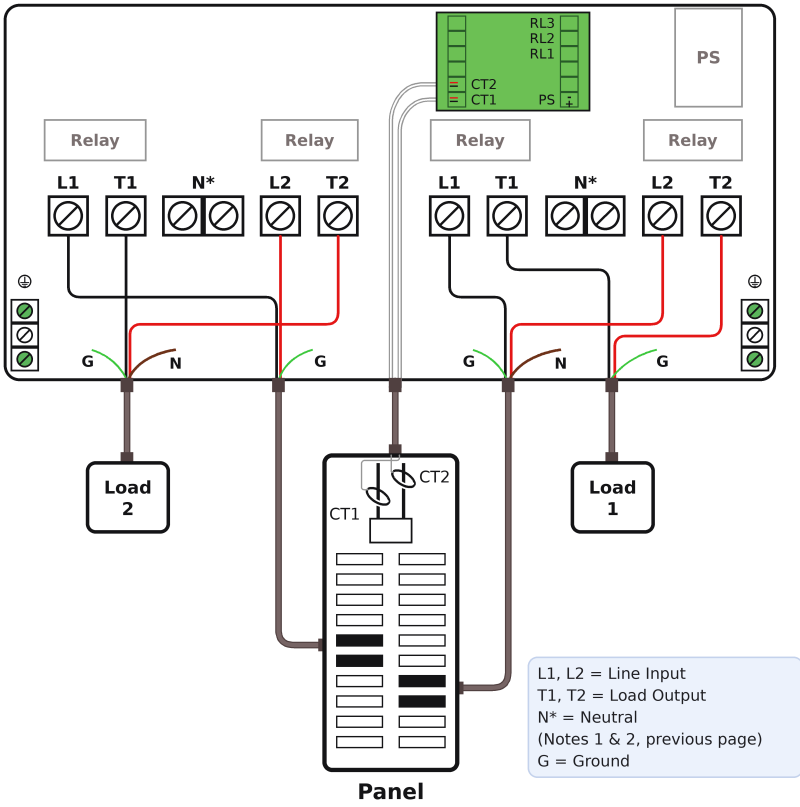


*Figure 3 – Dual-channel wiring and terminations (Notes 1 and 2 also apply)*

## CT Terminations

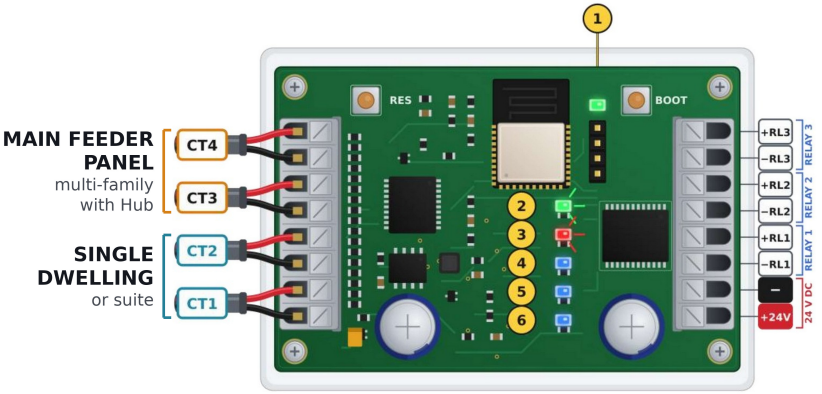


*Figure 4 – CT terminals on the VEC board*

- Each CT cable has one **red** and one **black** wire. On some CTs the red wire is **white**.
- Connect each CT cable to the terminal pair with the same CT number (CT1 cable to the CT1 terminals, and so on).
- In a single-dwelling installation, connect CT1 and CT2 only and leave CT3 and CT4 unused. CT3 and CT4 are used only in multi-family buildings with the VEC-xHUB (see Part B).

# INSTALLATION STEPS

## Step 1: Mount the VEC

- Select a location near the main panel that is dry, free from moisture, and protected from extreme temperatures and direct sunlight.
- Make sure the location is easily accessible for maintenance and repairs.
- Remove the cover by unscrewing the four screws.
- Position the VEC at the chosen location and secure it to the wall with suitable anchors and screws, making sure it is firmly attached.

## Step 2: Install Branch-Circuit Breakers and Complete Power Wiring

1. **Disconnect Power:** Turn off the electrical supply and verify all circuits are de-energized.
2. **Complete Wiring:** Install the required circuit breakers and use appropriately sized conductors in accordance with the electrical code. Connect the panel supply to L1 and L2, and T1 and T2 to the controlled load, as shown in Figure 2 (Single-Channel) or Figure 3 (Dual-Channel).

> **CAUTION:** Connect a maximum load of 60 A (the rating of the power relays) to the VEC-A-60A and VEC-A-60A-2C. For outdoor installations, use only the model with a NEMA 3R enclosure.

## Step 3: Install the CTs in the Main Panel

- Turn off power to the main panel at the electrical meter or the upstream disconnect switch.
- Install the CTs around the main supply conductors of the panel (see Figure 1). The CTs are split-core and can be opened. Install both CTs in the **same orientation** (same direction relative to the current flow) for accurate readings.
- Terminate CT1 and CT2 using the same wiring pattern: black first, then red (or white), starting from the CT1-marked corner, as shown in Figure 4.
- If the CT cables are too short, extend them to the required length with a minimum 18 AWG, 300 V shielded cable or equivalent.
- Use proper cable connectors (strain-relief connectors) for the CT cables.

> **CAUTION:** The CTs supplied with the unit (100 A or 200 A) are suitable only for panels with a main breaker rated up to the CT rating. Make sure the CT rating matches the main breaker rating of the panel.

## Step 4: Connect to the VEC (Mobile Hotspot)

> **Note: Wi-Fi is an optional feature** Wi-Fi is not required for operation. The VEC monitors current and protects the panel entirely on its own. Wi-Fi configuration is an optional convenience feature that lets installers adjust VEC settings on site for different applications. Alternatively, VEC units can be preconfigured at our manufacturing facility, especially for multi-family projects, and shipped ready for installation.

The VEC is pre-configured to connect to a mobile hotspot with the default network name and password. The following applies to both Android and iPhone:

- **Make sure the VEC is powered on.**
- Network names (SSID) and passwords are case-sensitive. Enter both in lowercase exactly as **velectric**, with no spaces.
- When your phone is connected to the VEC, the Wi-Fi LED on the board blinks faster (about once per second).
- For Google Pixel phones, use an app such as Net Analyzer to find the device IP address, then enter it in the browser address bar.

### 4.1 Android

1. **Enable Mobile Hotspot:** go to **Settings** > **Connections** (or Network & Internet) > **Mobile Hotspot & Tethering**, and turn on Mobile Hotspot.
2. **Set the network name and password:** tap Mobile Hotspot to open its settings, set the SSID to **velectric** and the password to **velectric**, and tap **Save**.
3. **Connect the VEC:** the VEC connects automatically when the network name and password match.
4. **Verify the connection:** check that the VEC appears in the list of connected devices in the Mobile Hotspot settings.
5. **Open the VEC page:** tap the connected device, then the information icon (i) in the top-right corner to see its IP address. Once you have the VEC's IP address, type it directly into the address bar (URL field) of your phone's web browser, where you would normally type a website address such as www.v-electric.com. Do not type it into Google Search or any other search engine. Tap **Go** or **Enter** to open the VEC main page (Figure 5).

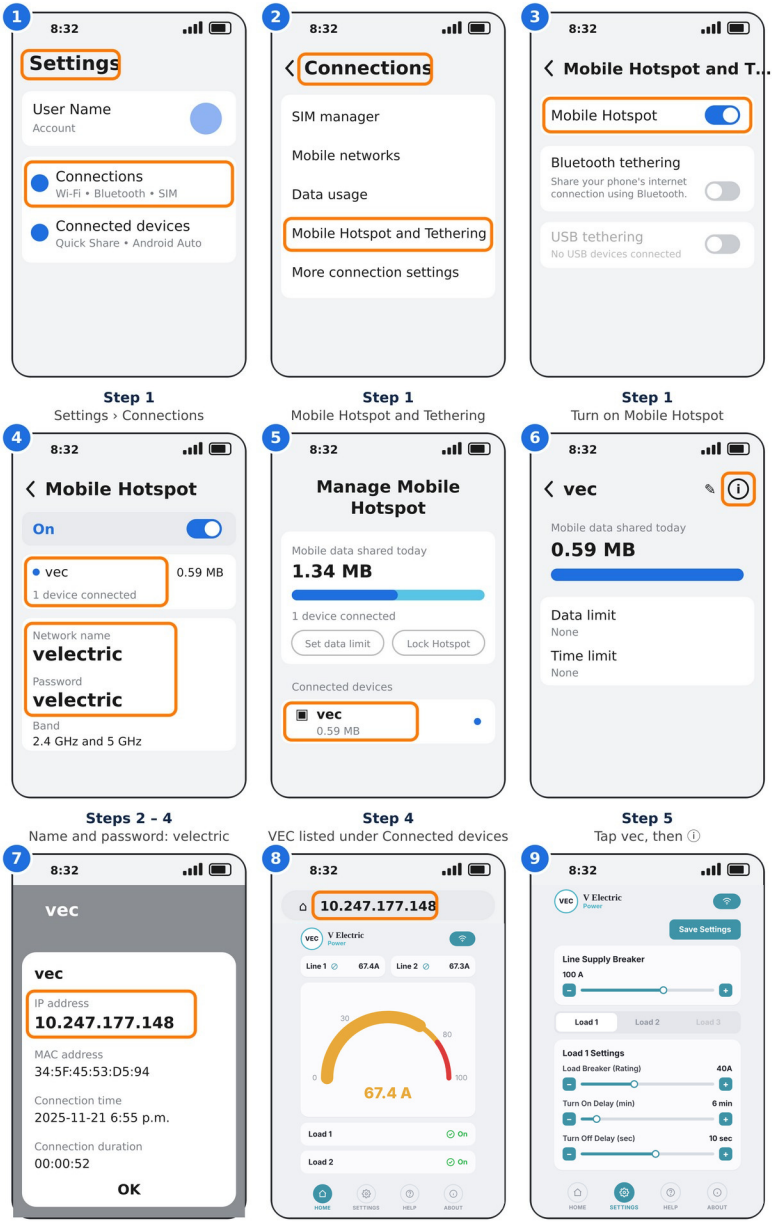


*Figure 5 – Android: turning on the hotspot, setting the name and password, and opening the VEC page (numbers match the screens; step numbers refer to 4.1)*

### 4.2 iPhone

1. **Enable Personal Hotspot:** go to **Settings** > **Personal Hotspot** and turn it on. Make sure **Allow Others to Join** and **Maximize Compatibility** are both ON.
2. **Set the password:** enter **velectric** as the Wi-Fi Password (all lowercase).
3. **Change the iPhone name temporarily:** in some cases the iPhone name must be **velectric**. Go to **Settings > General > About > Name** and enter **velectric**.
4. **Wait for the connection:** the VEC connects to the iPhone's hotspot. When the connection succeeds, the Wi-Fi LED on the board blinks faster.
5. **Open the VEC page:** open **Safari** and type **http://vec.local** in the address bar. The VEC main page opens (Figure 6).

> **Note:** If the VEC does not appear, or the green chain icon is not shown, turn **Allow Others to Join** off and then on again. This refreshes the hotspot and often restores the connection.

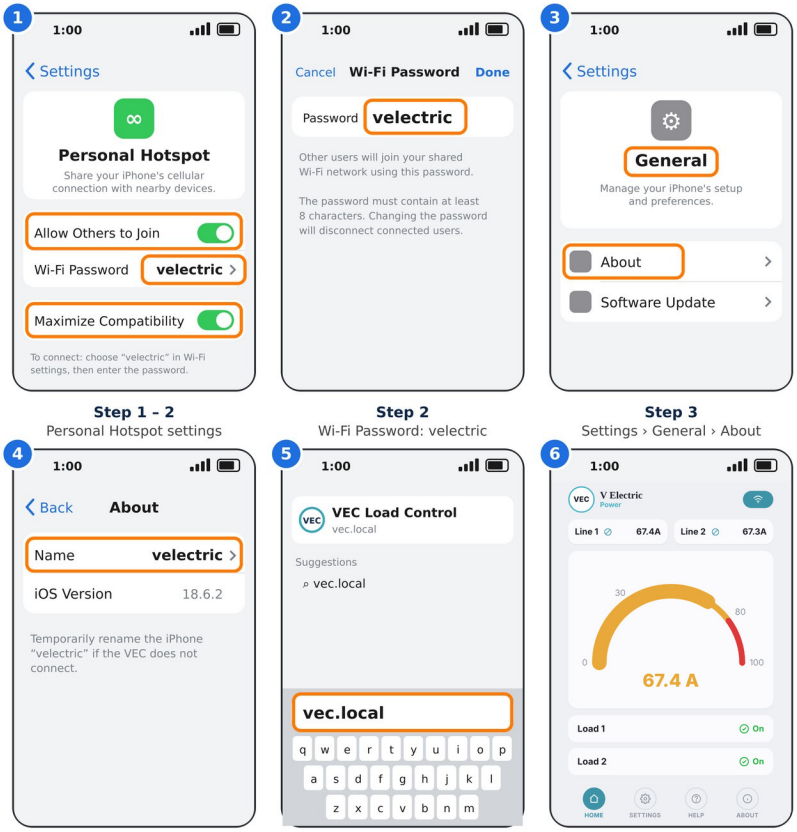


*Figure 6 – iPhone: Personal Hotspot settings, iPhone name, and opening vec.local in Safari (step numbers refer to 4.2)*

## Step 5: Configure the VEC Settings

Once the VEC main page appears on your phone, open the settings to complete the configuration. Depending on the model, the VEC controls 1 to 3 priority-based loads.

> **Note:** *Line Supply Breaker = main breaker of the suite panel (terms used interchangeably).*

The default values are:

| Parameter | Default | Range | Notes |
|---|---|---|---|
| **Line Supply Breaker** | 100 A | 5 – 200 A* (step 5 A) | Select the actual main breaker size (consider the CT size) |
| **Bus Supply Breaker** | 200 A | 5 – 1250 A* (step 5 A) | Select the actual size of the main feeder switch/breaker in the electrical room **Multi-family applications only** |
| **Load Breaker (Rating) Priority 1 / 2 / 3** | 50 A / 50 A / 50 A | 0 – 60 A | Select the nominal load rating; if unknown, use the load breaker size |
| **Turn-On Delay Priority 1 / 2 / 3** | 6 / 8 / 10 min | 1 – 60 min | Adjust per priority (see Note 4) |
| **Turn-Off Delay Priority 1 / 2 / 3** | 10 / 8 / 6 s | 1 – 15 s | Adjust per priority (see Note 4) |

* Make sure the CTs supplied with the VEC are suitable for the selected range.

**Note 1:** when the main panel current falls below 80% of its capacity – taking into account the load size and the total consumption – the load is re-energized after the Turn-On Delay has passed.

**Note 2:** if the current exceeds 80% of the Line Supply Breaker rating for longer than the Turn-Off Delay, the relay de-energizes. This delay distinguishes startup inrush current from a real overload.

**Note 3:** Load 2 and Load 3 settings are available only on dual-channel and three-channel models.

**Note 4:** Turn-On and Turn-Off delays also set load priority: for higher-priority loads, set a **shorter Turn-On Delay** and a **longer Turn-Off Delay**.

> **CAUTION:** Turn-Off Delays over 10 seconds may trip the main breaker instead of the load. Adjust carefully. Do not use 100 A CTs with main breakers above 100 A.

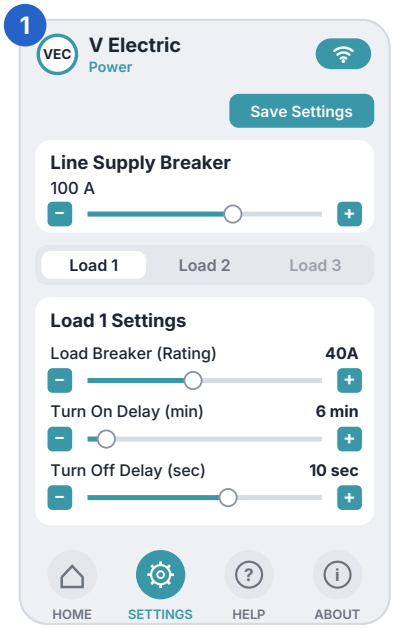


**Settings page**

Set breaker ratings and delays

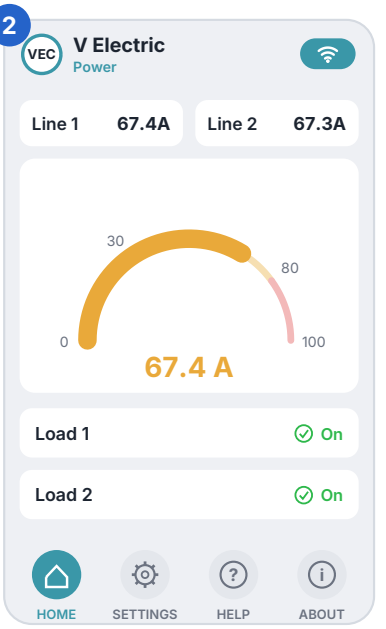


**Normal operation**

Both loads on (67 A)

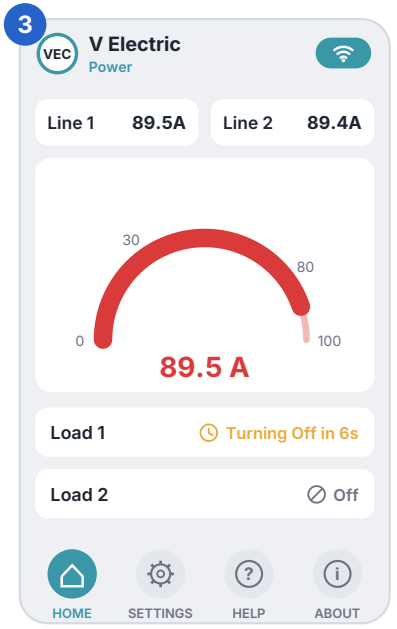


**Overload**

Load 1 turning off; Load 2 off (89 A)

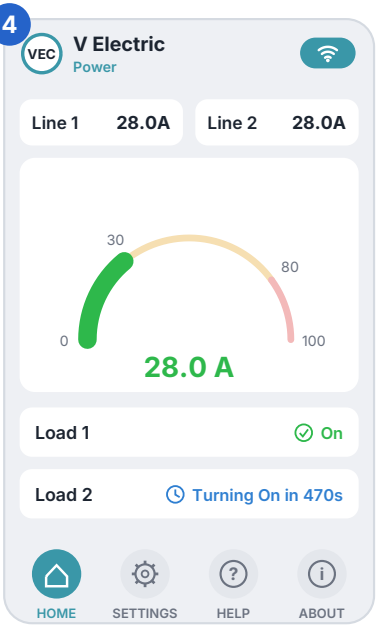


**Recovery**

Load 1 on; Load 2 reconnecting (28 A)

*Figure 7 – VEC app: settings page, normal operation, overload, and recovery*

### Settings

- **Line Supply Breaker:** select the size of the main circuit breaker in the main electrical panel.
- **Bus Supply Breaker:** select the size of the main feeder switch or breaker in the electrical room (multi-family applications only).
- **Load Breaker (Rating):** select the nominal load rating. If unknown, select the size of the breaker protecting the load.
- **Turn-On Delay:** once conditions are met, the relay energizes the load after this delay.
- **Turn-Off Delay:** allows for inrush current, sets the overload trip delay and, on dual-channel models, the priority. Start with the minimum (for example 5 s); if the relay de-energizes at startup, increase it by 1–2 s until the load stays on.
- Press **Save Settings** to save the changes permanently.

### Reading the Home Screen

- **CT1 and CT2** (Line 1 and Line 2 in newer app versions) show the true RMS current (A) on each phase of the main supply panel.
- **CT3 and CT4** (Bus 1 and Bus 2) show the true RMS current (A) on each phase of the main bus or feeder – multi-family installations only.
- The status shown next to each load means:

| Load status | Meaning |
|---|---|
| On | The relay is energized and the load has power. |
| Off | The relay is de-energized because the panel is at full capacity. |
| Turning on in ... s | Conditions to turn the load on are met; the VEC is waiting for the Turn-On Delay to pass. |
| Turning off in ... s | Inrush or overload detected. If the current stays high beyond the Turn-Off Delay, the relay de-energizes (overload rather than inrush). |

*The number shows the remaining time in seconds. When it reaches zero, the relay energizes or de-energizes based on the current on phases 1 and 2 at that moment.*

## Step 6: Change the Device Name, Network Name (SSID) and Password

The default SSID and password are **velectric**. **For security, change the default password at initial setup.** If the unit has a different SSID and password, contact your installer. If they have been lost, reset the VEC (Step 7).

1. Connect your phone or computer to the VEC Wi-Fi network.
2. Tap **About** at the bottom of the page, then **Network Configuration**.
3. Enter a valid **Device Name**, **Wi-Fi Network Name** (SSID) and **Password**. The password must be at least 8 characters. All entries are case-sensitive.
4. From now on, use the new details: on **iPhone**, type **NewDeviceName.local** in Safari instead of vec.local; on **Android**, the connected device appears as NewDeviceName instead of vec.
5. Write down the new SSID and password for future reference.
6. Tap **Save Changes**. The changes take effect after the device restarts.

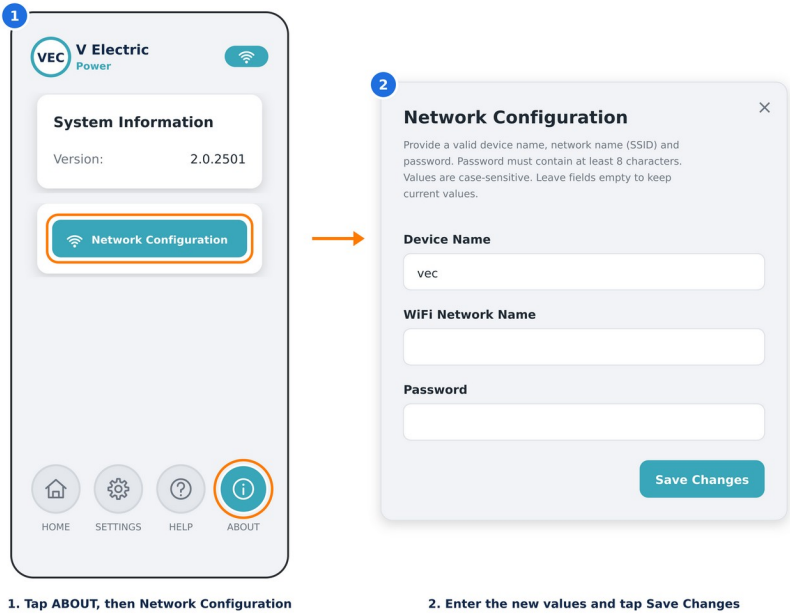


*Figure 8 – About page and Network Configuration window*

## Step 7: Reset the VEC (Optional)

To restore the factory device name, network name and password, press and hold the **BOOT** button (SW2) on the VEC board for **3 seconds**.

## Step 8: Interlock Mode Configuration (Optional)

To operate the VEC in interlock mode:

### 1. CT placement

- Place the CTs around the stove wires (or another essential load, based on load calculations).
- Do not place the CTs on the main breaker input.

### 2. How it works

- When the stove draws more than the interlock threshold, the VEC detects it as ON and turns off the non-essential load connected to the VEC.
- The non-essential load stays OFF as long as the stove is ON.

### 3. VEC settings (interlock mode)

| Setting | Value |
|---|---|
| **Main Supply Breaker** | 5 A |
| **Load Breaker (Rating)** | 0 A |
| **Turn-On Delay** | 1 minute or more |
| **Turn-Off Delay** | 1 second |

Press **Save Settings** on the SETTINGS tab to apply the changes.

## Step 9: Future Configuration (Do Not Change During Initial Setup)

The CT size and channel-count settings are configured at the factory to match the VEC unit and CTs supplied. **No changes are required during initial installation.** Leave these settings unchanged unless the system is upgraded later, for example:

- Adding channels to control more loads, or
- Upgrading the main electrical service (for example from 100 A to 125 A, 150 A or 200 A) with matching replacement CTs.

> ⚠️ **Important – CT size:** Changing the CT size setting **without physically replacing the installed CTs** results in incorrect current readings and may lead to unsafe operation. The CT setting must always match the CT hardware installed.

To change these settings, press and hold **ABOUT** for more than 5 seconds to open **Advanced Configuration** (Figure 9), where you can adjust the **number of channels** and the **CT size**. After making valid, hardware-matched changes, press **Save Changes**, then press **Save Settings** on the Settings page. For all Advanced Configuration options, see **Part B**.

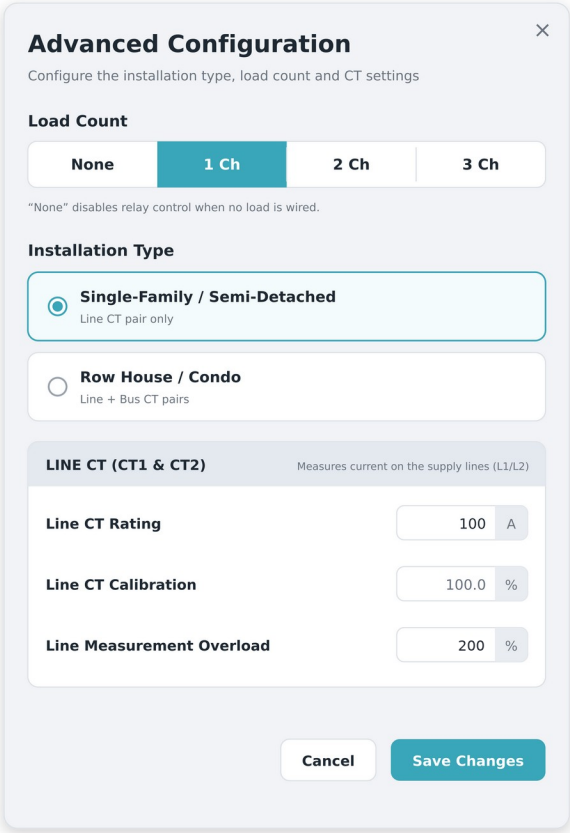


*Figure 9 – Advanced Configuration window (Single-Family / Semi-Detached)*

**PART B** | **Multi-Family**
Feeder Protection & Advanced Setup

# Advanced Configuration

*VEC Load Control · Smart Energy Management · For Multi-Family Applications*

## TABLE OF CONTENTS


PURPOSE AND INTENDED USE....23
HOW FEEDER PROTECTION WORKS....23
BEFORE YOU START....24
INSTALLATION AND SETUP STEPS....25
- Step 1: Connect the CTs (CT1 – CT4)....25
- Step 2: Power Up and Check the LEDs....26
- Step 3: Open the Advanced Configuration Window....26
- Step 4: Check the Load Count....27
- Step 5: Select the Installation Type....27
- Step 6: Check the Line CT Settings (CT1 & CT2)....28
- Step 7: Set the Bus CT Settings (CT3 & CT4)....28
- Step 8: Save the Configuration....29
- Step 9: Verify Operation....29

QUICK REFERENCE – MULTI-FAMILY / FEEDER PROTECTION....29
MODEL NUMBER STRUCTURE....31
PACKAGING CONTENTS....31

## PURPOSE AND INTENDED USE

The **Advanced Configuration** window sets how the VEC Load Control unit is wired and how it measures current. The same unit supports two installation types:

| Installation type | Typical building | CTs used | VEC-xHUB |
|---|---|---|---|
| **Single-Family / Semi-Detached** | Detached or semi-detached home with its own service | CT1, CT2 on the dwelling supply lines (L1/L2) | Not required |
| **Row House / Condo** (Feeder Protection) | Row houses, townhouses, condos and apartments where several suites share one feeder | CT1, CT2 on the suite supply lines, plus CT3, CT4 for the shared feeder signal | **Required** |

> **Note:** Select the installation type that matches the site before commissioning. With the wrong selection, the feeder current is not monitored and the feeder is not protected.

## HOW FEEDER PROTECTION WORKS

In a multi-family building, the VEC-xHUB measures the total current on the shared feeder through two Main CTs and sends this feeder signal to the VEC unit in every suite. Each VEC combines the feeder signal with its own suite measurement and adjusts its allowable current limit, so the shared feeder is not overloaded and the available capacity is shared fairly between suites.

Under normal conditions, each suite's allowable current limit may start at 80% of its main breaker rating. As total demand rises, the VEC units lower their limits (for example to 75% or 70%) and shed controlled loads. As demand falls, they raise their limits again and reconnect loads according to their priorities and reconnection delays.

**The system considers the following operating parameters:**

- **Shared Feeder Capacity:** the maximum permissible current of the common feeder or busbar, monitored by the VEC-xHUB.
- **Total Building Demand:** the combined electrical consumption of all connected suites, monitored by the VEC-xHUB.
- **Individual Suite Demand:** the real-time consumption measured locally by each VEC unit.
- **Available Electrical Capacity:** the capacity remaining before the shared feeder's permissible limit is reached.

- **Fair Load Distribution:** adaptive, proportional adjustment of each suite's current limit so that all suites have fair access to the available capacity.

The VEC-xHUB only measures and distributes the feeder signal. All current-limit adjustments, load-shedding decisions and load reconnection are performed by the VEC unit in each suite. This makes better use of the existing electrical infrastructure without increasing the feeder capacity.

> **Note:** The VEC units adjust electrical current limits for load management and feeder protection only. They do not change the ratings or protective characteristics of the installed circuit breakers. All operating limits remain subject to applicable electrical codes and equipment ratings.

## BEFORE YOU START

Confirm the following before configuring the VEC:

- The VEC unit is installed and set up as described in **Part A** of this manual.
- A phone or laptop with the VEC app is available and can connect to the VEC (see Part A).
- **For Row House / Condo (Feeder Protection) only:**
  - The VEC-xHUB is installed, with the two Main CTs on the feeder connected to the hub inputs CT1 and CT2.
  - A control wire runs from the hub output assigned to this suite (for example OUT1 for Suite 1) to the VEC location.
  - You know the rating of the Main CTs installed on the feeder (for example 600 A). The same **Bus CT Rating** is entered on every VEC connected to the hub.

> **WARNING:** Turn off power before connecting or disconnecting any CT. Installation and wiring must be performed by a certified technician and comply with the applicable electrical code (CEC in Canada or NEC in the USA).

## INSTALLATION AND SETUP STEPS

Complete the steps in order. Steps 1 and 2 are done at the VEC unit; Steps 3 to 9 are done in the VEC app.

### Step 1: Connect the CTs (CT1 – CT4)

**Turn off power to the VEC**, then connect each CT cable to its terminal pair as shown in Figure 10 and the table below.

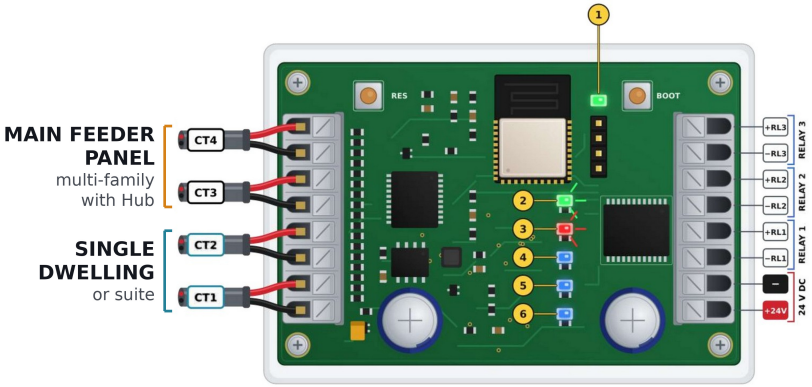


*Figure 10 – VEC terminals: CT inputs CT1 – CT4 (left), relay outputs and 24 VDC (right), and status LEDs 1 – 6*

| CT input | Connect to | Used in |
|---|---|---|
| **CT1** | Supply line L1 of the single dwelling or suite | All installations |
| **CT2** | Supply line L2 of the single dwelling or suite | All installations |
| **CT3** | Main feeder signal from the VEC-xHUB (control wire from the hub output assigned to this suite) | Row House / Condo only (with VEC-xHUB) |
| **CT4** | Main feeder signal from the VEC-xHUB (control wire from the hub output assigned to this suite) | Row House / Condo only (with VEC-xHUB) |

**Wiring notes**

- Each CT cable has one **red** and one **black** wire. On some CTs the red wire is **white**.
- Connect each CT cable to the terminal pair with the same CT number (CT1 cable to the CT1 terminals, and so on).
- In a single-dwelling installation, leave the CT3 and CT4 terminals unused.

## Step 2: Power Up and Check the LEDs

Restore power to the VEC and check the status LEDs. The LED numbers match Figure 10.

| LED | ON / BLINKING | OFF |
|---|---|---|
| 1 Power | Board powered | No power – check supply |
| 2 Wi-Fi | Fast (<1 s): connected<br>Slow (5 s): not connected | — |
| 3 CT status | CT fault – check wiring | CT OK (normal) |
| 4 5 6 Load 1 · 2 · 3 | Load ON | Load OFF |

*Figure 11 – LED status indicators*

**Before continuing, check that:**

- **LED 1 (Power)** is on.
- **LED 3 (CT status)** is off. If it blinks, a CT is not connected correctly: turn off power and check the wiring from Step 1.

## Step 3: Open the Advanced Configuration Window

1. Connect to the VEC with your phone or laptop and go to the **HOME** screen.
2. Press and hold the **ABOUT** button for more than **5 seconds**.
3. The **Advanced Configuration** window opens.

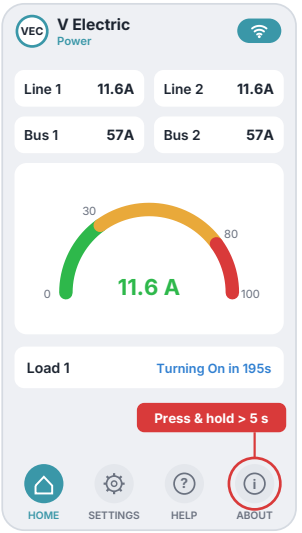


*Figure 12 – Press and hold ABOUT for more than 5 seconds*

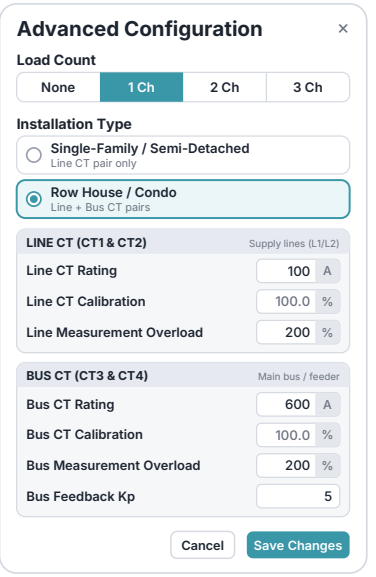


*Figure 13 – Advanced Configuration window*

The window has three areas: **Load Count, Installation Type,** and the **CT settings** panels. The CT panels shown depend on the installation type selected.

## Step 4: Check the Load Count

Load Count is the number of controlled loads (relay channels). It is set at the factory to match the VEC model, so normally no change is needed. Change it only if a V Electric expansion module is added later, for example to go from one to two controlled loads.

| Option | Use when |
|---|---|
| **None** | No load is wired to the relays. Relay control is disabled and the unit only measures. Used only to monitor the main feeder current in the electrical room, if needed. |
| **1 Ch** | One controlled load (for example one EV charger) is wired to relay channel 1. |
| **2 Ch** | Two controlled loads are wired to relay channels 1 and 2. |
| **3 Ch** | Three controlled loads are wired to relay channels 1, 2 and 3. |

*Select only the channels that are actually wired.*

## Step 5: Select the Installation Type

### 5.1 Single-Family / Semi-Detached

Select this option for a detached or semi-detached home with its own service. Only the **LINE CT (CT1 & CT2)** panel is shown, and only CT1 and CT2 are installed. Continue with Step 6, then skip Step 7.

### 5.2 Row House / Condo

Select this option for any multi-family installation (row house, townhouse, condo or apartment) where a shared feeder or main bus must be protected. A second panel, **BUS CT (CT3 & CT4)**, appears below the LINE CT panel. Both CT pairs must be connected:

- **CT1 & CT2** on the suite supply lines (L1/L2).
- **CT3 & CT4** to the main feeder signal from the VEC-xHUB.

> ⚠️ **Required accessory:** Feeder Protection mode requires the VEC-xHUB. Without it, the Bus CT (CT3 & CT4) function is not available. With the VEC-xHUB installed, complete Steps 6 and 7.

## Step 6: Check the Line CT Settings (CT1 & CT2)

The Line CTs measure the current on the suite supply lines (L1/L2). These settings apply to both installation types.

| Setting | Default | Description |
|---|---|---|
| **Line CT Rating (A)** | 100 A | Set at the factory. No adjustment needed unless the main breaker is later upgraded to another size. |
| **Line CT Calibration (%)** | 100 % | Factory calibrated. No adjustment needed. |
| **Line Measurement Overload (%)** | 200 % | Instantaneous shutdown limit. If the line current reaches this percentage of the Line CT Rating, the load is shut down instantly. Example: 100 A × 200 % = 200 A. |

## Step 7: Set the Bus CT Settings (CT3 & CT4)

**Row House / Condo only.** The Bus CTs carry the total current on the main bus or feeder, measured by the VEC-xHUB. This panel appears only when **Row House / Condo** is selected.

| Setting | Default | Description |
|---|---|---|
| **Bus CT Rating (A)** | 600 A | **Set to the rating of the Main CTs installed on the feeder** (for example 600 A). Must be the same on every VEC connected to the same VEC-xHUB. |
| **Bus CT Calibration (%)** | 100 % | Factory calibrated. No adjustment needed. |
| **Bus Measurement Overload (%)** | 200 % | Instantaneous shutdown limit. If the bus current reaches this percentage of the Bus CT Rating, the load is shut down instantly. Example: 600 A × 200 % = 1200 A. |
| **Bus Feedback Kp** | 5 | Proportional gain of the bus-current control loop. Sets how strongly the controller reduces the controlled load as the bus current approaches its limit. A higher value responds faster but may cause the load to cycle; a lower value responds more smoothly but more slowly. Keep the default unless the manufacturer advises otherwise. |

> **Important:** A wrong Bus CT Rating gives wrong feeder readings on every suite. Enter the rating of the Main CTs actually installed, and use the same value on all VEC units connected to the hub.

## Step 8: Save the Configuration

- Press **Save Changes** at the bottom of the window. The new settings are stored and applied only after Save Changes is pressed.
- Press **Cancel** (or the × in the top-right corner) to close the window without saving. Any changes made since the window was opened are discarded.

## Step 9: Verify Operation

Return to the HOME screen of the VEC app and check that:

- **Line 1** and **Line 2** show the suite's own current.
- **Bus 1** and **Bus 2** show the main feeder current (Row House / Condo only), and that the readings are the same on every suite connected to the hub.
- **LED 3 (CT status)** on the VEC is off.
- Record the settings and readings for the building records before leaving the site.

# QUICK REFERENCE – MULTI-FAMILY / FEEDER PROTECTION

Use this checklist on site once the steps above are familiar.

| # | Action | Step |
|---|---|---|
| 1 | VEC-xHUB installed, Main CTs connected to the hub, control wire run to this suite | Before you start |
| 2 | Power off; connect CT1/CT2 (suite) and CT3/CT4 (feeder signal from the hub) | 1 |
| 3 | Power on; LED 1 (Power) on, LED 3 (CT status) off | 2 |
| 4 | Open Advanced Configuration (hold ABOUT for more than 5 seconds) | 3 |
| 5 | Check Load Count (factory set: 1 Ch, 2 Ch or 3 Ch) | 4 |
| 6 | Select Installation Type: Row House / Condo | 5 |
| 7 | Check the Line CT Rating and Line Measurement Overload | 6 |
| 8 | Set Bus CT Rating = Main CT rating; check Bus Measurement Overload and Bus Feedback Kp | 7 |
| 9 | Press Save Changes | 8 |
| 10 | Check Line 1/Line 2 and Bus 1/Bus 2 readings; Bus readings the same on all suites; LED 3 off | 9 |

## WARRANTY

**Limited One-Year Warranty**

- This unit is warranted to the original purchaser to be free from defects in materials and workmanship for one year from the date of purchase, without additional charge.
- The warranty is automatically void for incorrect installation or installation by unauthorized personnel.
- V Electric Power Inc. will not be liable for any damages, delays, or transportation costs associated with defective devices.
- V Electric Power Inc. will not be responsible for any indirect damages or delays resulting from faulty workmanship or materials.
- All repairs and services must be performed at V Electric Power Inc.'s facility. V Electric Power Inc. will not cover any costs for repairs or replacements made by the customer.

## MODEL NUMBER STRUCTURE

**VEC-A-** ☐ ☐ ☐ ☐
**1 2 3 4**

| # | Field | Options |
|---|---|---|
| **1** | Load capacity (max) | 60A: loads up to 60 A / 120A: loads up to 120 A |
| **2** | Number of channels | Empty: single channel / 2C: dual channel |
| **3** | Busbar overload protection | Empty: none / S: busbar overload protection |
| **4** | Enclosure type | Empty: Type 1 / 3R: Type 3R |

## PACKAGING CONTENTS

- **VEC-A-60A** or **VEC-A-60A-2C** (depending on the unit purchased)
- 2 × split-core current transformers (100 A or 200 A)
- Installation manual

## INSTALLATION RECORD

Complete this record at commissioning and leave the manual with the owner.

| | |
|---|---|
| **Installation date** | |
| **Installer / company** | |
| **Licence / certificate no.** | |
| **Site address** | |
| **Model (VEC-A-...)** | |
| **Serial number** | |
| **Main breaker rating (A)** | |
| **CT rating (A)** | |
| **Installation type (single / multi-family)** | |
| **Bus CT rating (A) – multi-family** | |
| **Hub output (OUTn) – multi-family** | |
| **Load 1 – description / rating (A)** | |
| **Load 2 – description / rating (A)** | |
| **Turn-On / Turn-Off delays** | |
| **Device name / SSID** | |
| **Mode (Interlock / Load-Shedding)** | |

**Notes**

*Do not record the Wi-Fi password here; keep it in a secure place.*